Rear Suspension Adjustments

Refer to *Safety Precautions* on page 19.

The rear suspension can be adjusted for the rider's weight and riding conditions by changing the spring pre-load and the rebound and compression damping.

The rear shock absorber assembly includes a damper unit that contains high pressure nitrogen gas. Do not attempt to disassemble, service, or dispose of the damper; see your dealer.
The instructions found in this owner's manual are limited to adjustments of the shock assembly only.
Puncture or exposure to flame may also result in an explosion, causing serious injury.
Service or disposal should only be done by your authorized dealer or a qualified mechanic, equipped with the proper tools, safety equipment and the official Honda Service Manual.

If your CRF is new, put enough part-throttle break-in time (about 1 hour) on it to ensure that the suspension has worked in.

Rear Suspension Spring Pre-Load

An optional pin spanner is available for turning the lock nut and adjusting nut to adjust spring pre-load.

1. Place an optional workstand under the engine to raise the rear wheel off the ground.
2. Remove the subframe. See page 32.
3. Check that the spring pre-load is adjusted to the standard length. Adjust as necessary by loosening the lock nut (1) and turning the adjusting nut (2).
   Each complete turn of the adjuster nut changes the spring length by 0.06 in (1.5 mm).
4. After adjustment, hold the adjusting nut and tighten the lock nut to the specified torque:
   32 lbf·ft (44 N·m, 4.5 kgf·m)

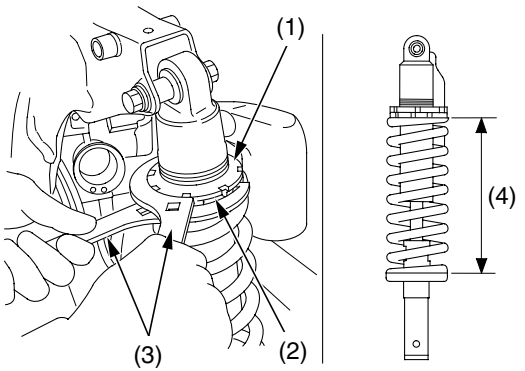

(1) lock nut
(2) adjusting nut
(3) pin spanners
(4) spring length

To increase spring pre-load:
Loosen the lock nut with the optional pin spanners (3) and turn the adjusting nut to shorten the spring length (4). Do not shorten to less than:
8.7 in (222 mm) CRF150R
8.9 in (226 mm) CRF150RB

To decrease spring pre-load:
Loosen the lock nut with the optional pin spanners (3) and turn the adjusting nut to increase the spring length (4). Do not increase to more than:
9.27 in (235.5 mm) CRF150R
9.25 in (235.0 mm) CRF150RB

Each turn of the adjuster changes spring length and spring pre-load. One turn equals: spring length/spring pre-load:
0.06 in (1.5 mm)/16.5 lbf (7.5 kgf)..CRF150R
0.06 in (1.5 mm)/17.2 lbf (7.8 kgf)..CRF150RB

Pin spanners should be used for turning the lock nut and adjusting nut.

(CRF150R)
Spring preload length (Standard spring)
Standard: 9.23 in (234.5 mm)
Min. : 8.7 in (222 mm)

Spring preload length (Optional spring)
Min. (Softer, 268.4 lbf/in (47.0 N/mm)):
8.8 in (223 mm)
Min. (Stiffer, 291.2 lbf/in (51.0 N/mm)):
8.9 in (226 mm)
(CRF150RB)
Spring preload length (Standard spring)
Standard: 9.21 in (234.0 mm)
Min. : 8.9 in (226 mm)

Spring preload length (Optional spring)
Min. (Softer, 279.8 lbf/in (49.0 N/mm)):
8.7 in (222 mm)
Min. (Stiffer, 302.6 lbf/in (53.0 N/mm)):
8.7 in (221 mm)