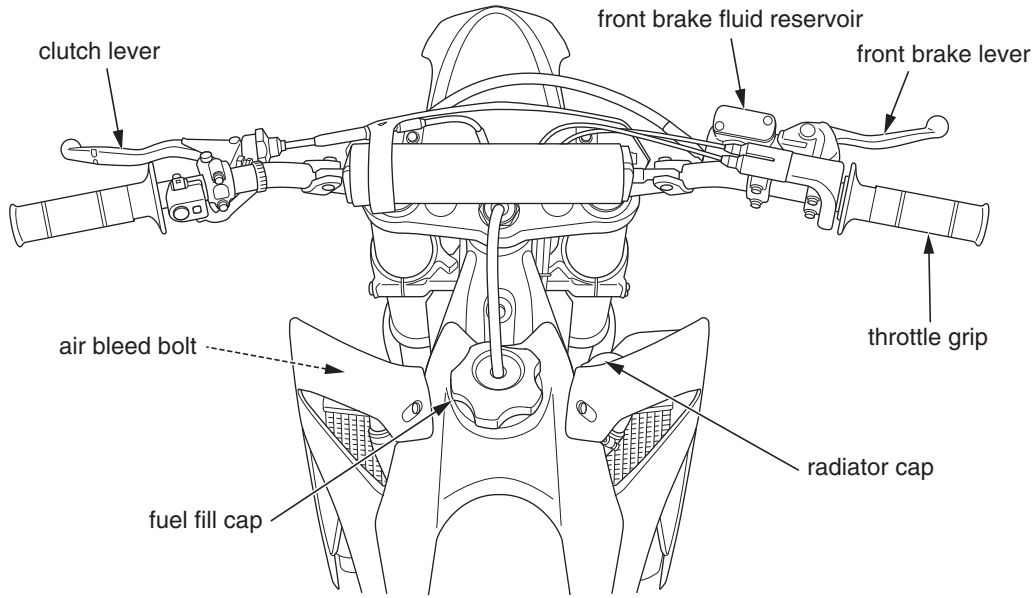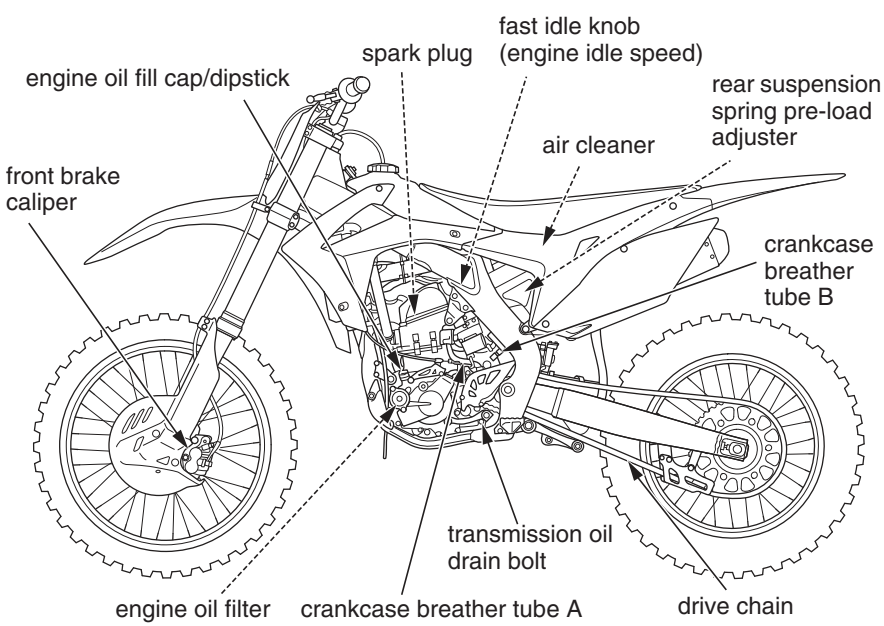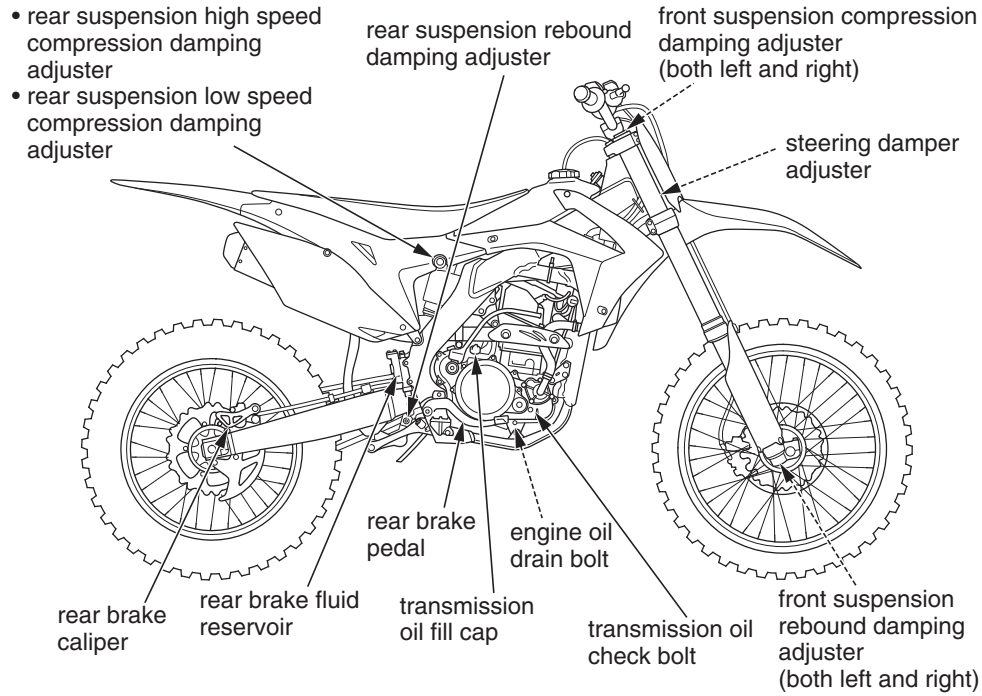Maintenance Component Locations