Parts Location *(Continued)*

Model equipped with Optional Passenger Seat Kit

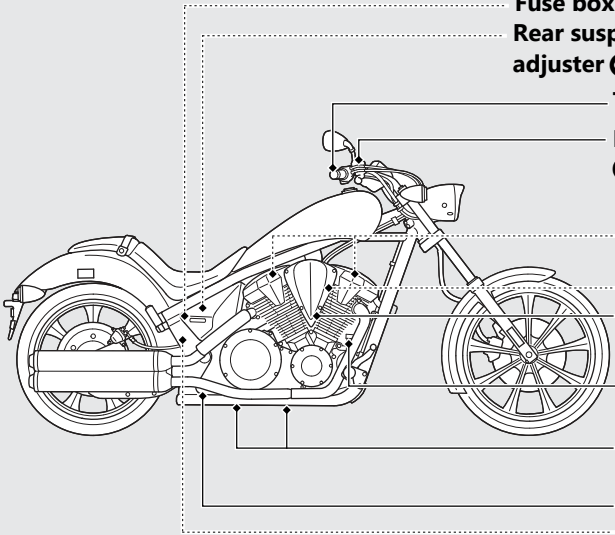

Fuse box P.107

Rear suspension spring preload adjuster P.87

Throttle grip P.84

Front brake fluid reservoir P.77

Spark plugs P.64

Air cleaner P.72

Crankcase breather tube P.85

Rear brake fluid reservoir P.77

Engine oil drain bolts P.70

Engine oil filter P.70

Rear suspension rebound damping adjuster P.88