F-4

Handle pipe •
Handle cover

Tuyau de guidon •
Couvercle de guidon

Lenkrohr •
Lenkrohrdeckel

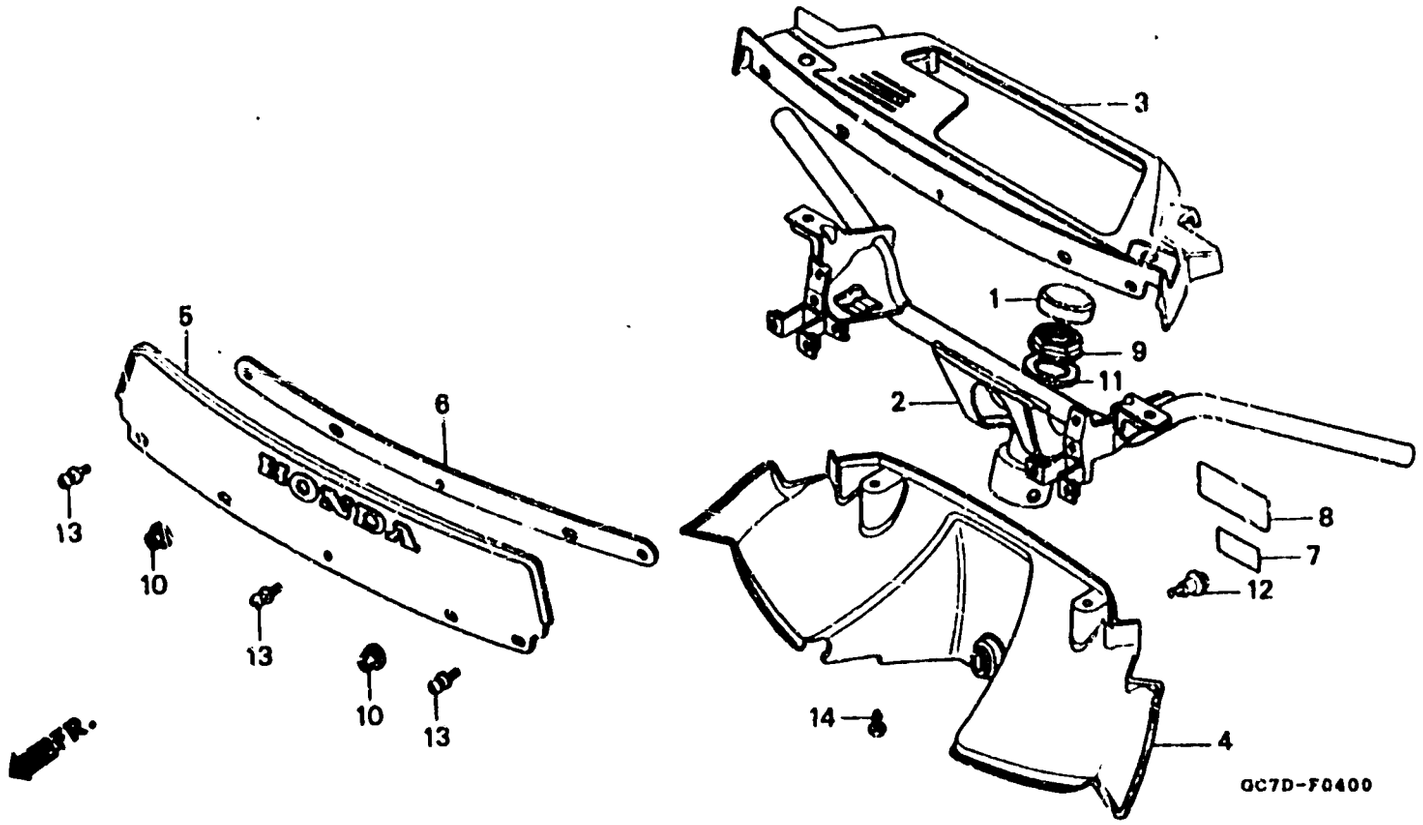

Item d'entretien	T.D.R.	N° de réf.	N° de pièce	Description	N° de repère NH50M DD	NH50M SD	NH50M SE	NH50M DE	NH80M DD	NH80M SD	NH80M DE	N° de série	Code de zone
GUIDON COMP. DIRECTION	1.0	1	44835-GA6-000	BOUCHON DE TIGE DE DIRECTION	1	1	1	1	1	1	1		
COUVERCLE SUPERIEUR DE GUIDON	0.3	2	53100-GC8-010	GUIDON COMP. DIRECTION	1	–	–	–	1	–	–	....	E,GR,U,1K,1L
COUVERCLE INFERIEUR DE GUIDON	0.1		53100-GC8-610	GUIDON COMP. DIRECTION	1	1	1	1	1	1	–	....	AR,B,CM,F,G SW
.PARE-BRISE			53100-GC8-770	GUIDON COMP. DIRECTION	–	–	–	–	–	–	1		
		3	53205-GC8-000ZA	COUVERCLE SUPERIEUR DE GUIDON									
				•NH111• .....BLANC DE CORTINA	1	1	–	1	1	1	–	....	AR,B,E,F,G,GR SW,U,1K,1L
			53205-GC8-000ZB	•PB109• .....BLEU DE NEPTUNE	1	1	–	1	1	1	–	....	AR,B,E,F,G,GR SW,U,1K,1L
			53205-GC8-000ZE	•R116• .....ROUGE DE RUISSEAU	1	1	–	1	1	1	–	....	AR,B,E,F,G,GR SW,U,1K,1L
			53205-GC8-000ZF	•R120• .....ROUGE DE FLAMME	1	1	–	1	1	1	–	....	AR,B,E,F,G,GR SW,U,1K,1L
			53205-GC8-010ZA	•NH111• .....BLANC DE CORTINA	–	–	1	–	–	–	–		
			53205-GC8-010ZB	•PB109• .....BLEU DE NEPTUNE	–	–	–	–	1	–	–	....	CM
			53205-GC8-010ZE	•R116• .....ROUGE DE RUISSEAU	–	–	1	–	1	–	–	....	AR,CM
			53205-GC8-010ZG	•NH131M• ARGENTE DE LUMIERE DETEILE METALLIQUE	–	–	1	–	–	–	–		
			53205-GC8-010ZJ	•R4C• .....ROUGE DE RUBIS CANDI	–	–	–	–	–	–	1		
			53205-GC8-010ZL	•NH137M• ARGENTE METALLIQUE MOONLIT	–	–	–	–	–	–	1		
			53205-GC8-010ZN	•NH1• .....NOIR	–	–	1	–	–	–	–		
		4	53206-GC8-000ZA	COUVERCLE INFERIEUR DE GUIDON									
				•NH122• .....GRIS DE BETE	1	1	1	1	1	1	1		
			53206-GC8-000ZB	•R126• .....ROUGE VIPERE	–	–	1	–	–	–	–		
			53206-GC8-000ZC	•B105• .....BLEU AURORE	–	–	1	–	–	–	–		
		5	64100-GC8-000	PARE-BRISE	1	1	1	1	1	1	1		