C 8

E-5

Drive face - Kick starter

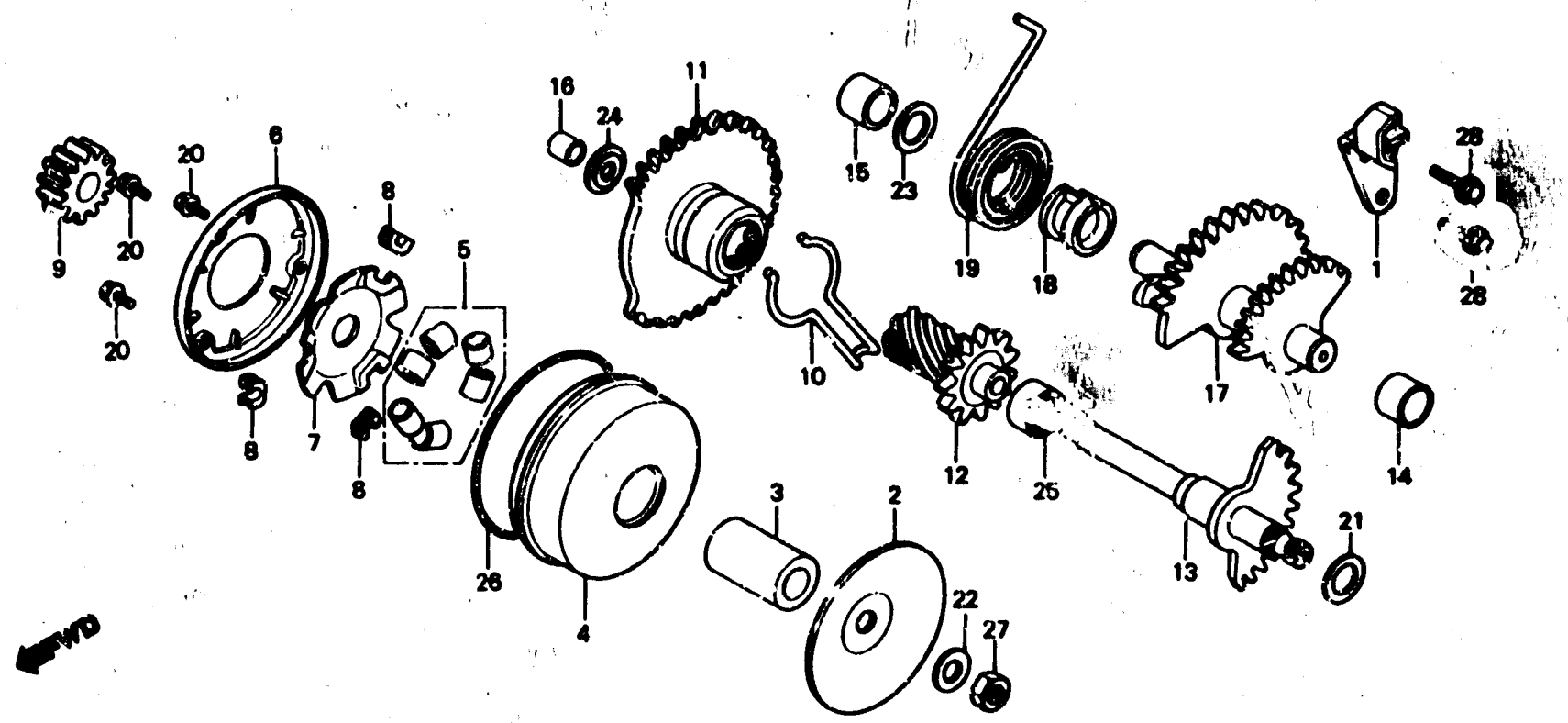

Service item	F.R.T.	Ref. No.	Part No.	Description	Reqd No PX50 H	SH	MSH	Reqd No PXR50 H	SH	MSH	K	SK	MSK	Area Code
		16	28255-187-003	BUSH, 10 x 14 x 8.5	1	1	1	1	1	1	1	1	1	
		17	28260-197-000	SHAFT COMP., IDLE	1	1	1	1	1	1	1	1	1	
		18	28262-197-000	COLLAR, KICK SPINDLE	1	1	1	1	1	1	1	1	1	
		19	28281-197-000	SPRING, KICK STARTER	1	1	1	1	1	1	1	1	1	
		20	90005-187-000	BOLT, FLANGE 4 x 10	3	3	3	3	3	3	3	3	3	
		21	90412-187-000	WASHER, THRUST	1	1	1	1	1	1	1	1	1	
		22	90426-001-000	WASHER, MAGNETO FIXING	1	1	1	1	1	1	1	1	1	
		23	90451-155-000	WASHER, 14 MM	1	1	1	1	1	1	1	1	1	
		24	90453-197-000	WASHER, 10 MM	1	1	1	1	1	1	1	1	1	
		25	91201-197-003	RING, SEALING, 18 MM	1	1	1	1	1	1	1	1	1	
		26	91302-187-000	O-RING, 78 x 2.5	1	1	1	1	1	1	1	1	1	
		27	94031-10000	NUT, HEX, 10 MM	1	1	1	1	1	1	1	1	1	
		28	96000-06018-00	BOLT, FLANGE, 6 x 18	2	2	2	2	2	2	2	2	2	