H 9

F-15

Exhaust muffler

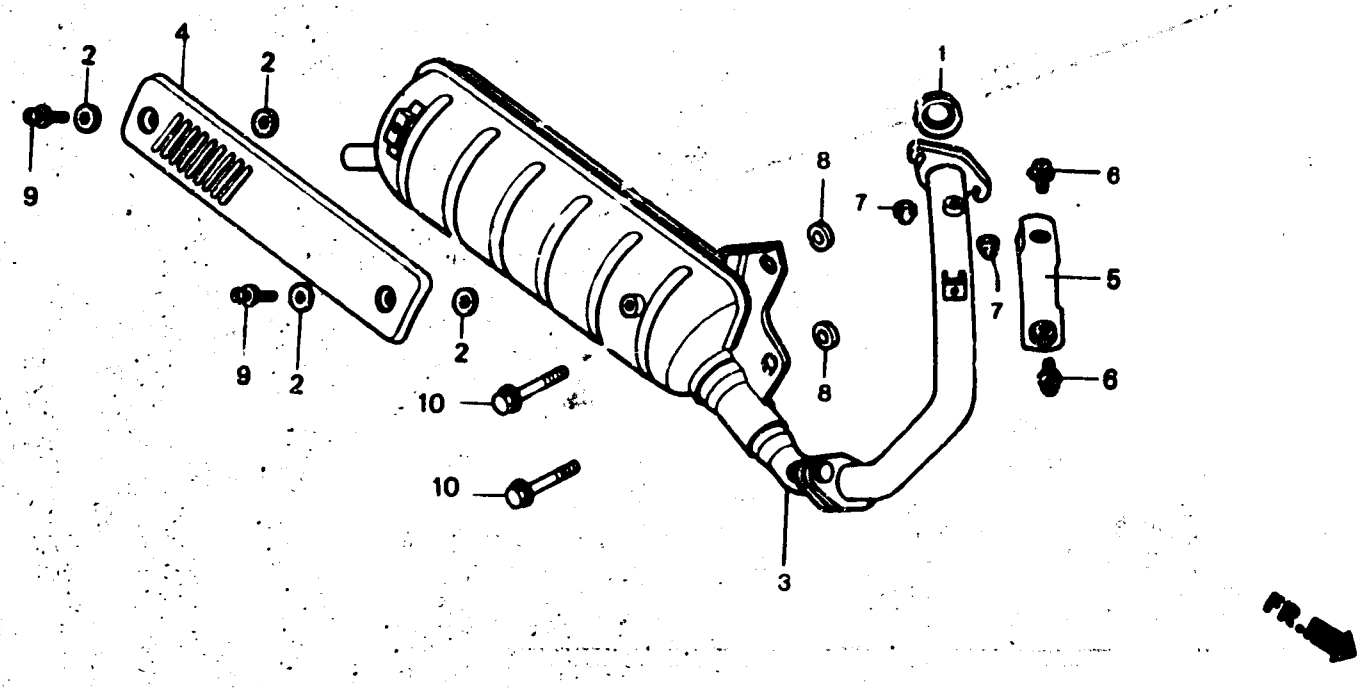

GY18 - F1500

Service item	F.R.T.	Ref. No.	Part No.	Description	Reqd No. SA50 M	Reqd No. SA50 SM	Serial No.	Area Code
		7	90207-165-600	NUT, CAP, 6 MM	4	4		
		8	90501-GK8-870	COLLAR, MUFFLER MOUNTING	2	2		
		9	93891-05010-07	SCREW-WASHER, 5X10	2	2		
		10	95701-08028-07	BOLT, FLANGE, 8X28	2	2		