F-14 EXHAUST MUFFLER

G 3

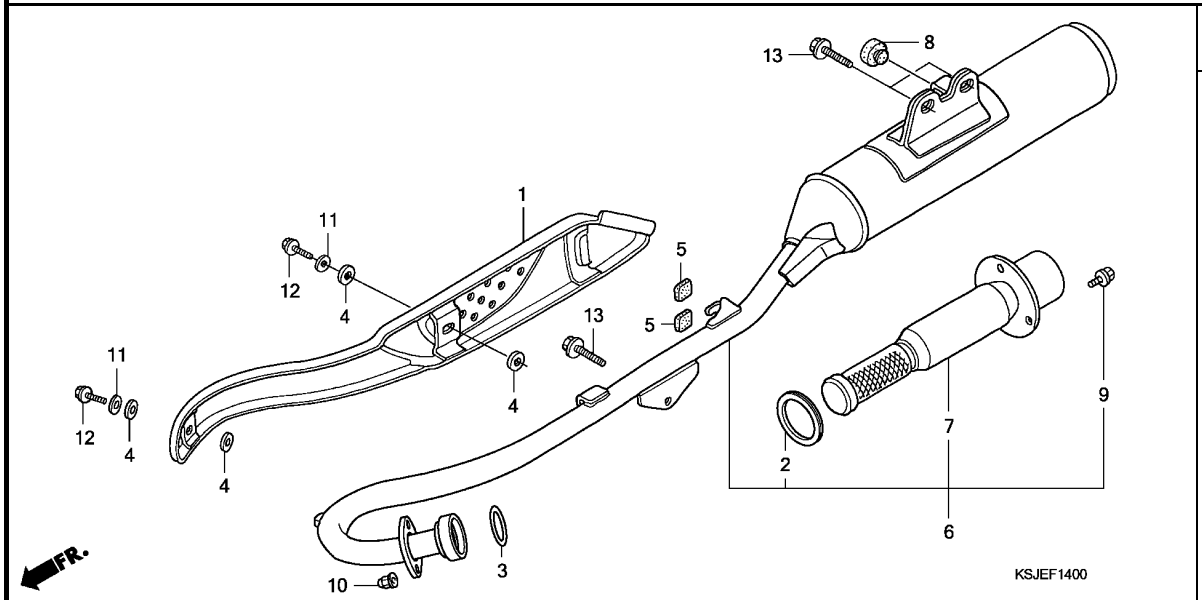

Ref. No.	L.O.N.	(Relative ref. Number) Description	F.R.T.
1	3131A6	PROTECTOR, EXHAUST PIPE ------	0.1
3	3131B4	GASKET, EXHAUST PIPE ---------	0.2
6	313120	MUFFLER ----------	0.2
7		(2)	
	3131C1	ARRESTER, SPARK ----------	0.1

Ref. No.	Part No.	Description	Reqd. QTY CRF80F 8	CRF80F 9	CRF80F B	CRF100F 8	CRF100F 9	CRF100F A	CRF100F B	Serial No.	Parts catalogue code
1	18240-KN4-A60	PROTECTOR, EX. PIPE ---------	1	1	1	1	1	1	1		
2	18291-KR1-680	GASKET A, EX. PIPE ----------	1	1	1	1	1	1	1		
3	18291-KZ1-670	GASKET, EX. PIPE ----------	1	1	1	1	1	1	1		
4	18292-KBR-000	PACKING, PROTECTOR ----------	4	4	4	4	4	4	4		
5	18293-MBC-000	RUBBER, PROTECTOR PACKING ---	2	2	2	2	2	2	2		
6	18300-KSJ-670	MUFFLER ASSY. ----------	1	1	1	1	1	1	1		
7	18318-KN4-305	ARRESTER COMP., SPARK -------	1	1	1	1	1	1	1		
8	83512-KA4-700	RUBBER, SIDE COVER ----------	1	1	1	1	1	1	1		
9	90101-KCE-000	BOLT, FLANGE, 6X10 ----------	3	3	3	3	3	3	3		
10	90304-438-000	NUT, CAP, 6MM ----------	2	2	2	2	2	2	2		
11	94101-06700	WASHER, PLAIN, 6MM ----------	2	2	2	2	2	2	2		
12	96001-06012-07	BOLT, FLANGE, 6X12 ----------	2	2	2	2	2	2	2		
13	96300-08014-07	BOLT, FLANGE, 8X14 ----------	3	3	3	3	3	3	3		

3