F - 11

Front Wheel (Drum)

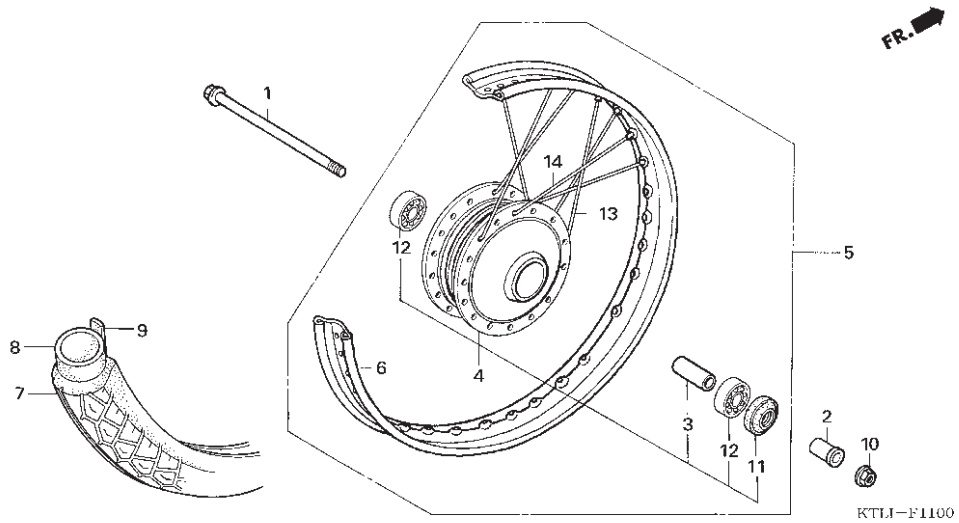

	Service item	F.R.T.
1	AXLE, FRONT WHEEL.....	0.2
4	HUB, FRONT WHEEL.....	2.3
5	FRONT WHEEL.....	0.7
6	RIM, WHEEL :FRONT.....	2.2
7	FRONT TIRE(ONE).....	0.7
8	TUBE, FRONT TIRE(ONE).....	0.7
12	BEARING, FRONT WHEEL(ONE).....	0.4
	.Replace 1 bearing add 0.1	

No.	Part Number	Description	QTY ANF100	QTY ANF100D	Notes
1	44301-KPH-900	AXLE, FR. WHEEL	1	--	
2	44311-KPH-900	COLLAR, FR. WHEEL SIDE	1	--	
3	44620-400-000	COLLAR, FR. AXLE DISTANCE	1	--	
4	44601-KPH-900	HUB SUB ASSY., FR.			
		NH255M SHIMMER SILVER METALLIC	1	--	
5	44650-KPH-890ZB	WHEEL SUB ASSY., FR.			
		NH255M SHIMMER SILVER METALLIC	1	--	
6	44701-KPH-880	RIM, FR. WHEEL	1	--	
7	44711-KTM-850	TIRE, FR. (SRI) (70/90-17 M/C 38P)	1	--	
8	42712-GBG-881	TUBE, TIRE (80/90-17)	1	--	
9	42713-GBG-881	FLAP, TIRE	1	--	
10	90306-KGH-901	NUT, U, 12MM	1	--	
11	91251-KPH-901	DUST SEAL, 21X37X7	1	--	
12	HB6201	BEARING, RADIAL BALL, 6201U	2	--	
13	111-160	SPOKE SET , 11X160	36	--	