FRONT WHEEL (2PH)

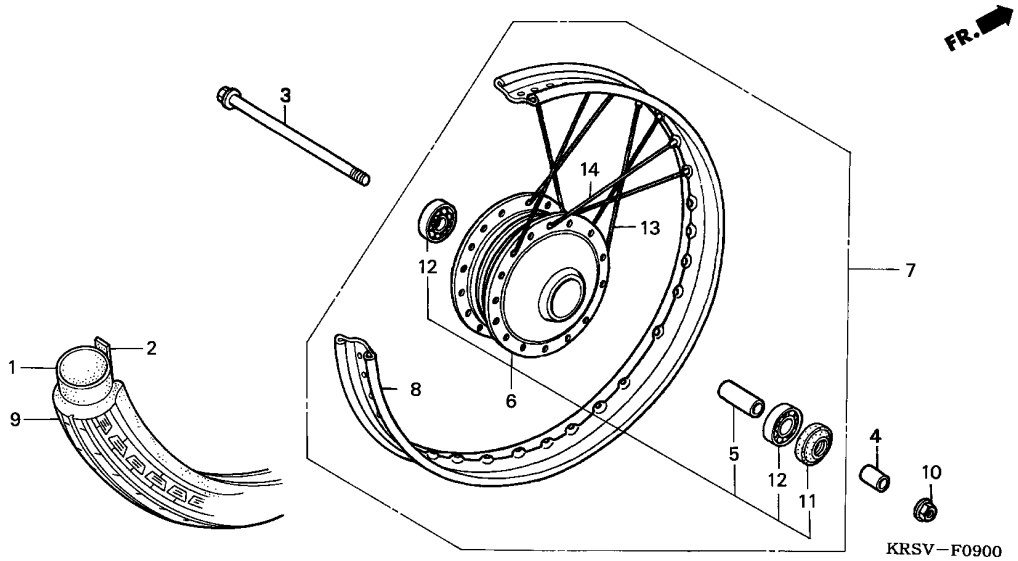

Ref. No.	Part No.	Description	Reqd. QTY NF100M 3	Reqd. QTY NF100MM 4	Serial No.		Parts catalogue code
12	96140-63010-10	BEARING, RADIAL BALL, 6301U	2	-	--------	--------	2PH
			-	2			
13	97172-21157-F0	SPOKE SET A, 12X158.5 (INSIDE)	18	-	--------	--------	2PH
			-	18			
14	97604-21157-F0	SPOKE SET (A10X158.5) (OUTSIDE)	18	-	--------	--------	2PH
			-	18			

3