F - 16

Fuel Tank

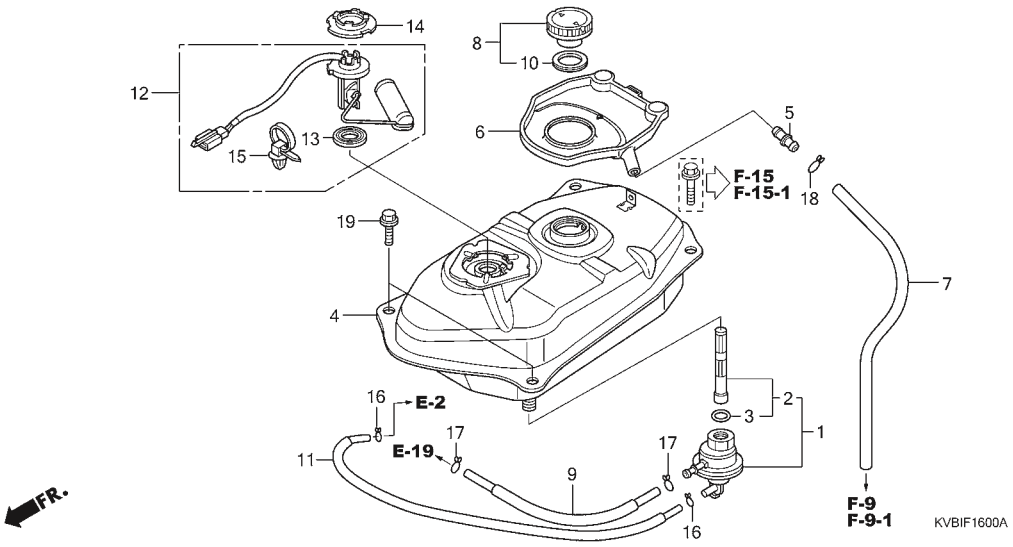

Service item	F.R.T.
1 COCK, FUEL AUTO	0.7
2 (3) SCREEN, FUEL STRAINER	0.7
4 TANK, FUEL	0.8
12 (13) FUEL TANK SENDING UNIT	0.7

No.	Part Number	Description	QTY	Notes
1	16950-KJ9-752	COCK ASSY., FUEL AUTO	1	
2	16952-KJ9-752	SCREEN SET, FUEL STRAINER	1	
3	16958-397-771	O-RING, 9.0X1.3	1	
4	17510-KVB-930	TANK COMP., FUEL	1	
5	17525-KBN-900	JOINT, FUEL TUBE	1	
6	17525-KVB-901	TRAY, FUEL	1	
7	17526-KVB-900	TUBE, DRAIN	1	
8	17620-KGH-600	CAP, FUEL FILLER	1	
9	17630-KVB-900	TUBE ASSY., FUEL	1	
10	17631-KEV-900	PACKING, FUEL FILLER CAP	1	
11	17635-KVB-900	TUBE, PRESSURE	1	
12	37080-KVB-930	FUEL UNIT SET	1	
13	37801-GA7-700	PACKING, BASE	1	
14	37802-GA7-700	RETAINER, FUEL UNIT	1	
15	91540-KPH-902	CLIP, HARNESS BAND	1	
16	95002-02070	CLIP, TUBE (B7)	2	
17	95002-02080	CLIP, TUBE (B8)	2	
18	95002-80000	CLIP, TUBE (C12)	1	
19	95701-08016-00	BOLT, FLANGE, 8X16	2	