F-13

Fuel tank

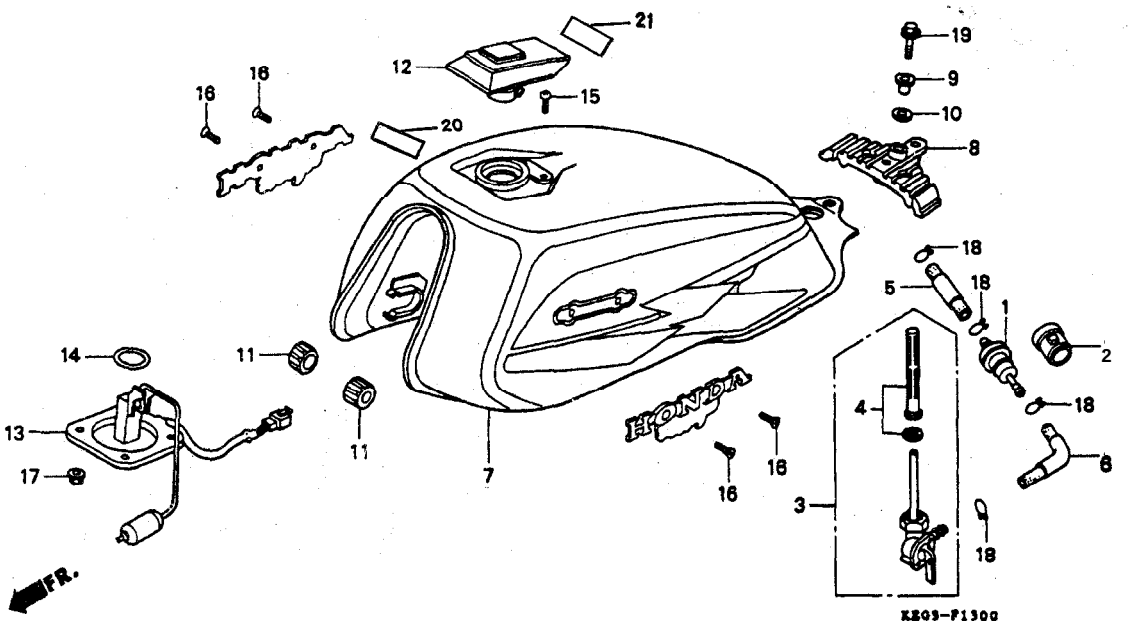

KE03F1300

Service item / Bagian yang diservis	F.R.T.	Ref. No. / Nomor petunjuk	Part No. / Nomor Part	Description / Nama - Part	Reqd.No. / Jumlah GL Max II	GL PRO II	Serial No. / Nomor Serie	Notes / Catatan
STRAINER COMP., FUEL	0.3	1	16910-GB2-005	STRAINER COMP., FUEL	1	1		
. FUEL UNIT		2	16915-GB2-000	SUSPENSION, STRAINER	1	1		
COCK ASSY., FUEL	0.2	3	16950-KE6-830	COCK ASSY., FUEL	1	1		
. SCREEN SET, FUEL STRAINER		4	16953-155-015	SCREEN SET, FUEL STRAINER	1	1		
TANK SET, FUEL	0.4	5	16955-KC6-910	TUBE COMP., FUEL (4.5X70)	1	1		
CAP COMP., FUEL FILLER	0.1	6	16955-KEH-900	TUBE COMP., FUEL (4.5X80)	1	1		
		7	17510-KE6-910FMB	TANK SET, FUEL (BLACK)	1	1		
			17510-KE6-910FME	TANK SET, FUEL (GREEN)	1	1		
			17510-KE6-910FMI	TANK SET, FUEL (VIOLET)	1	1		
		8	17508-KC5-000	CUSHION, FUEL TANK CENTER	1	1		
		9	17525-KC5-000	COLLAR, FUEL TANK MOUNTING	1	1		
		10	17526-KC5-000	RUBBER, FUEL TANK CENTER	1	1		
		11	17611-286-000	CUSHION, FUEL TANK FR	2	2		
		12	17620-KC5-000	CAP COMP., FUEL FILLER	1	1		
		13	37800-KEH-900	FUEL UNIT	1	1		
		14	91305-MC7-000	O-RING, 39.5X5	1	1		
		15	93500-04006-00	SCREW, PAN, 4X6	2	2		
		16	93700-03008-0G	SCREW, OVAL, 3X8	4	4		
		17	94050-06000	NUT, FLANGE, 6MM	4	4		
		18	95002-02080	CLIP, TUBE (B8)	4	4		
		19	95701-08028-00	BOLT, FLANGE, 8X28	1	1		
		20	87131-KG2-922	EMBLEM, TANK TOP	1	1		
		21	87560-KC5-920	MARK, DRIVE CAUTION	1	1		

Color chart for fuel tank set
Tabel warna untuk fuel tank set

Type	Main color	Color label code
TYPE1	Black (NH-I)	N H1K
TYPE2	Vortex purple metallic (RP - 140M)	RP140
TYPE3	Tasmania green metallic (G-142M)	G 142