E-13 STARTER MOTOR

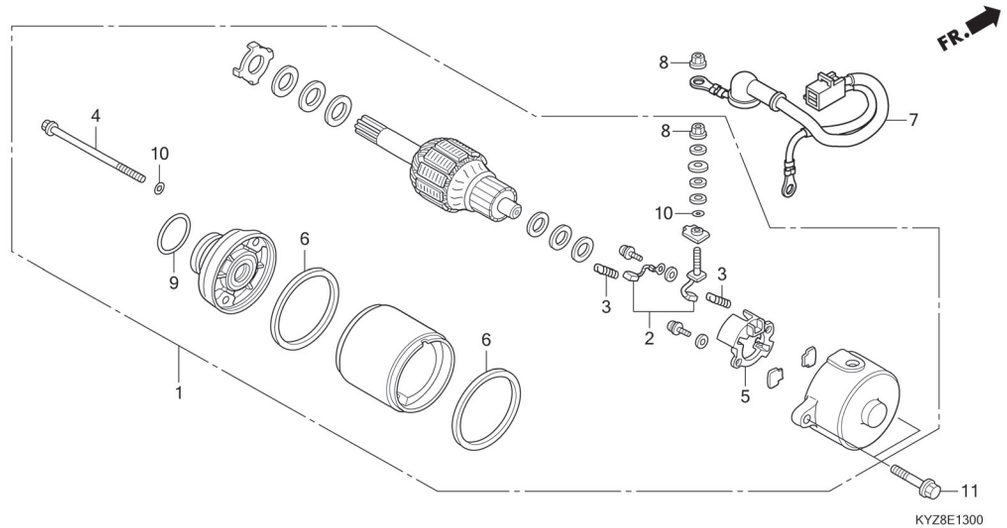

No. Ref.	L.O.N.	(Nomor ref. relatif) Deskripsi	F.R.T.
1	612105	MOTOR, STARTING.....	0,7
2		(3)	
	6121A4	TERMINAL, BRUSH(STARTER).....	0,9
5	6121A5	HOLDER, BRUSH(STARTER).....	0,9
7	612115	CABLE, STARTER MOTOR.....	0,5

No. Ref.	No. Part	Deskripsi	Jumlah SUPRA-X 125 Carb.	Jumlah SUPRA-X 125 PGM-FI	No. Seri	Kode Parts Catalog
1	31200-KPH-881	MOTOR ASSY., STARTER	1	1		
2	31201-KPH-881	BRUSH SET, TERMINAL	1	1		
3	31204-KG8-004	SPRING, CARBON BRUSH	2	2		
4	31205-KPH-881	BOLT, SETTING	2	2		
5	31206-KPH-881	HOLDER, BRUSH	1	1		
6	31207-MBE-009	RING	2	2		
7	32410-KYZ-900	CABLE, STARTER MOTOR	1	1		
8	90071-MB0-001	NUT-WASHER, 6MM	2	2		
9	91309-425-003	O-RING, 24.4X3.1(AR)	1	1		
10	91320-MB0-000	O-RING	3	3		
11	95701-06025-00	BOLT, FLANGE, 6X25	2	2		