E - 17 - 10

Transmission

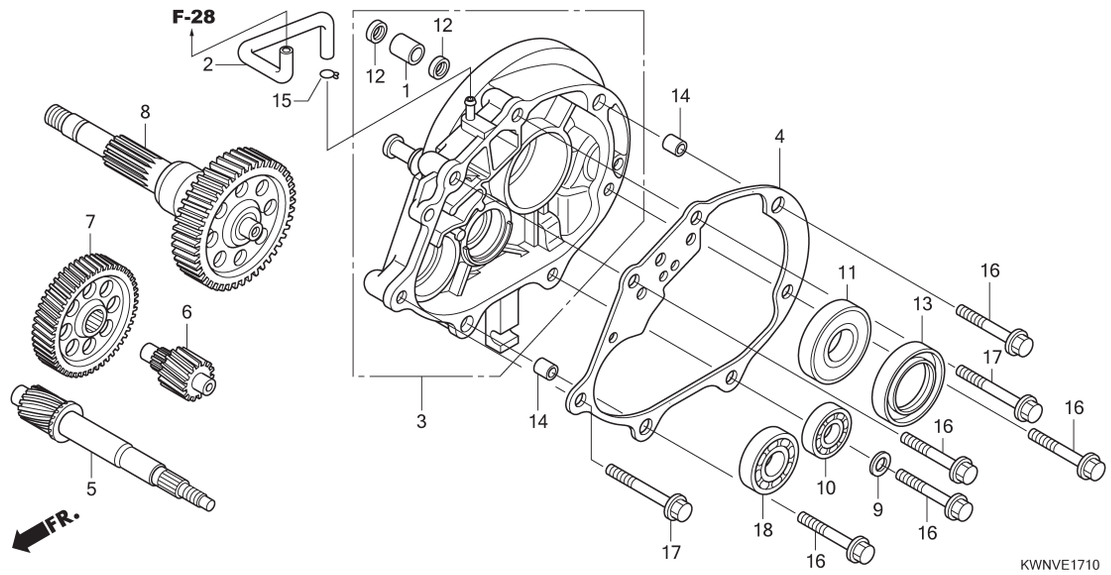

Ref No.	(Relative ref. Number) Description	F.R.T.
3	CASE, TRANSMISSION	1,3
4	GASKET, TRANSMISSION CASE	0,9
5	SHAFT, DRIVE	1,2
6	COUNTERSHAFT, TRANSMISSION	0,9
7	GEAR, COUNTER	0,9
8	SHAFT, FINAL GEAR	0,9
10	BEARING, COUNTERSHAFT :RIGHT	1,1
	BEARING, COUNTERSHAFT :BOTH	1,2
11	BEARING, FINAL GEAR SHAFT :RIGHT	1,1
	BEARING, FINAL GEAR SHAFT :BOTH	1,2
18	BEARING, DRIVESHAFT :RIGHT	1,1
	BEARING, DRIVESHAFT :BOTH	1,3

Ref No.	Part No.	Description	QTY	Notes
1	11204-KGF-900	SLEEVE, RR. BRAKE CAM	1	
2	11211-KWN-900	TUBE, MISSION BREATHER	1	
3	21200-KWN-900	CASE COMP., TRANSMISSION	1	
4	21395-KWN-900	GASKET, TRANSMISSION CASE	1	
5	23411-KWN-900	SHAFT, DRIVE(17T)	1	
6	23421-KWN-900	COUNTERSHAFT(13T)	1	
7	23422-KWN-900	GEAR, COUNTER(53T)	1	
8	23430-KWN-900	GEAR COMP., FINAL(47T)	1	
9	90495-MN5-000	WASHER, SEALING, 8MM	1	
10	91006-KWN-901	BEARING, RADIAL BALL, 6201	1	
11	91009-KWN-901	BEARING, RADIAL BALL, 6205 UU	1	
12	91201-434-003	OIL SEAL, 14X20X3	2	
13	91204-KWN-900	OIL SEAL, 34X52X7	1	
14	94301-10120	DOWEL PIN, 10X12	2	
15	95002-50000	CLIP, TUBE(C9)	1	
16	95701-0804500	BOLT, FLANGE, 8X45	5	
17	95701-0805500	BOLT, FLANGE, 8X55	2	
18	96100-6202000	BEARING, RADIAL BALL, 6202	1	