F-36 REAR CUSHION

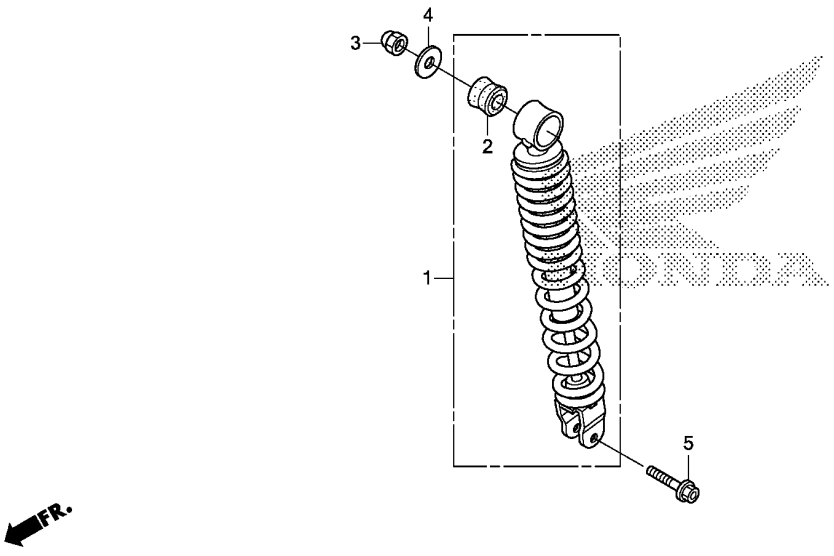

Ref. No.	L.O.N.	(Relative ref. Number) Description	F.R.T.
1	512115	CUSHION ASSY., REAR ----------	0.5

Ref. No.	Part No.	Description	Reqd. QTY ACB150CBT H	Serial No.	Parts catalogue code
1	52400-K59-A11	CUSHION ASSY., RR. ----------	1		
2	52485-KVY-901	BUSH, RUBBER(SHOWA) ---------	1		
3	94021-10000-0S	NUT, CAP, 10MM ----------	1		
4	94101-10000	WASHER, PLAIN, 10MM ---------	1		
5	95801-08032-00	BOLT, FLANGE, 8X32 ----------	1		