E-17 DRIVEN FACE

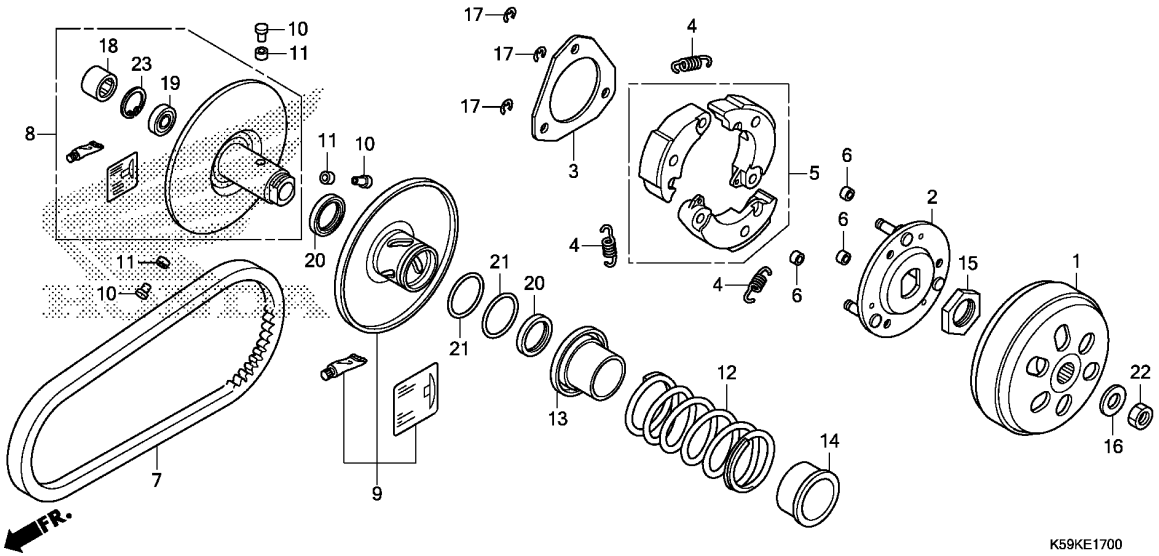

Ref. No.	L.O.N.	(Relative ref. Number) Description	F.R.T.
1	2121A0	OUTER, CLUTCH	0.3
5		(2,4)	
	2121A6	WEIGHT SET, CLUTCH	0.8
7	2111B2	BELT, DRIVE	0.4
8		(10,11,13)	
	2111A2	FACE, DRIVEN	0.7
9		(20,21)	
	2111A3	FACE, MOVABLE DRIVEN	0.8
12		(14)	
	2111A7	SPRING, DRIVEN FACE	0.6
18		(19)	
	2111A8	BEARING, DRIVEN FACE	0.9
	2111A8A	.Replace 1 bearing add	0.1

Ref. No.	Part No.	Description	Reqd. QTY ACB150 CBT K	Serial No.	Parts catalogue code
1	22100-KWN-900	OUTER COMP., CLUTCH	1		
2	22350-GFM-900	PLATE COMP., DRIVE	1		
	22350-K97-T01		1		
	22350-KVB-900		1		
3	22361-KVB-900	PLATE, CLUTCH SIDE	1		
4	22401-KWN-640	SPRING, CLUTCH	3		
5	22535-K12-V00	WEIGHT SET, CLUTCH	1		
6	22804-148-000	RUBBER, CLUTCH DAMPER	3		
7	23100-K36-J01	BELT, DRIVE	1		
8	23205-K59-A70	FACE SET, DRIVEN	1		
9	23224-K59-A70	FACE SET, MOVABLE DRIVEN	1		
10	23225-KSY-900	PIN, ROLLER GUIDE	3		
11	23226-KVB-900	ROLLER, GUIDE	3		
12	23233-K36-J00	SPRING, DRIVEN FACE	1		
13	23237-K35-V00	COLLAR, SEAL	1		
14	23238-KVB-900	COLLAR, SPRING	1		
15	90202-KN7-670	NUT, SPECIAL, 28MM	1		
16	90441-GY6-940	WASHER, 12.2X29X2.5	1		
17	90605-166-720	CIRCLIP, 7MM	3		
18	91001-KCW-003	BEARING, NEEDLE, 20X29X18(NTN)	1		
	91109-GGC-G01	BEARING, NEEDLE, 20X29X18	1		
	91109-KVY-902	BEARING, NEEDLE, 20X29X18 (SCHAEFFLER)	1		
19	91002-GA7-701	BEARING, RADIAL BALL, 6902U (NTN)	1		
	91004-GGC-G01	BEARING, RADIAL BALL, 6902U	1		