E-3 CAMSHAFT/VALVE

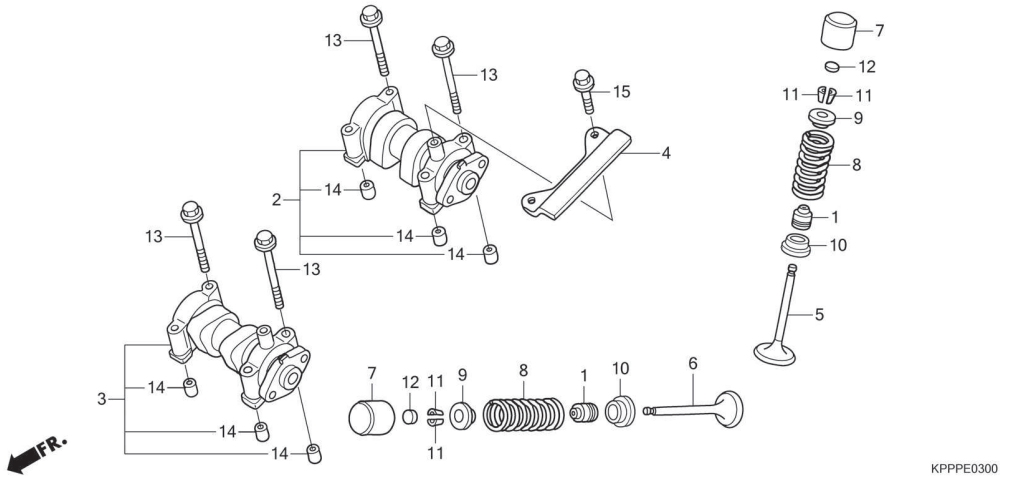

No. Ref.	L.O.N.	(Nomor ref. relatif) Deskripsi	F.R.T.

No. Ref.	No. Part	Deskripsi	Jumlah CBR150R C	No. Seri	Kode Parts Catalog
12)	14933-KT7-013	SHIM, TAPPET(2.000)	4		
	14934-KT7-013	SHIM, TAPPET(2.025)	4		
	14935-KT7-013	SHIM, TAPPET(2.050)	4		
	14936-KT7-013	SHIM, TAPPET(2.075)	4		
	14937-KT7-013	SHIM, TAPPET(2.100)	4		
	14938-KT7-013	SHIM, TAPPET(2.125)	4		
	14939-KT7-013	SHIM, TAPPET(2.150)	4		
	14940-KT7-013	SHIM, TAPPET(2.175)	4		
	14941-KT7-013	SHIM, TAPPET(2.200)	4		
	14942-KT7-013	SHIM, TAPPET(2.225)	4		
	14943-KT7-013	SHIM, TAPPET(2.250)	4		
	14944-KT7-013	SHIM, TAPPET(2.275)	4		
	14945-KT7-013	SHIM, TAPPET(2.300)	4		
	14946-KT7-013	SHIM, TAPPET(2.325)	4		
	14947-KT7-013	SHIM, TAPPET(2.350)	4		
	14948-KT7-013	SHIM, TAPPET(2.375)	4		
	14949-KT7-013	SHIM, TAPPET(2.400)	4		
	14950-KT7-013	SHIM, TAPPET(2.425)	4		
	14951-KT7-013	SHIM, TAPPET(2.450)	4		
	14952-KT7-013	SHIM, TAPPET(2.475)	4		
	14953-KT7-013	SHIM, TAPPET(2.500)	4		
	14954-KT7-013	SHIM, TAPPET(2.525)	4		