F-33 REAR CUSHION

G13

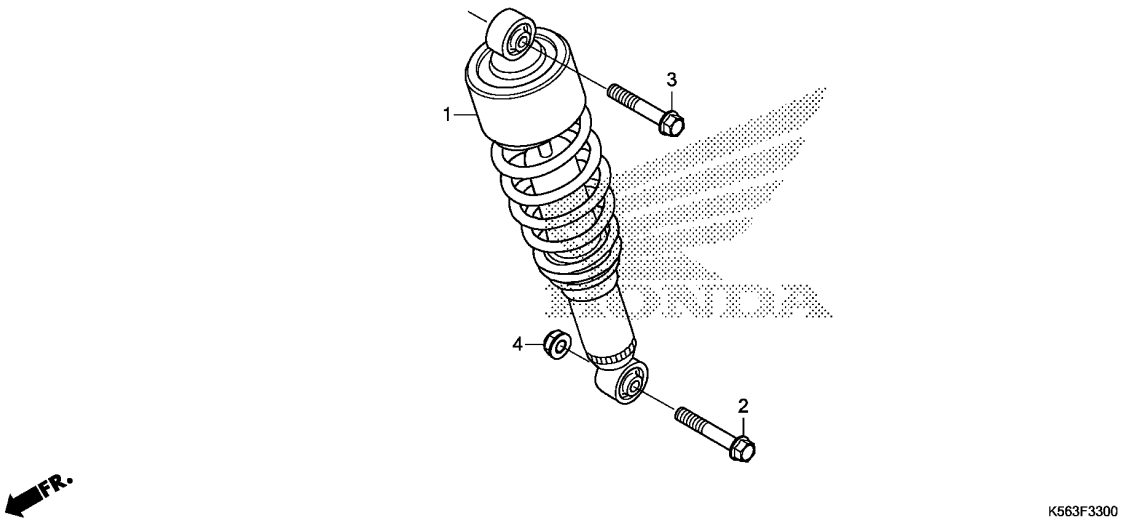

Ref. No.	L.O.N.	(Relative ref. Number) Description	F.R.T.
1	512115	CUSHION ASSY., REAR ----------	0.6

Ref. No.	Part No.	Description	Reqd. QTY FS 150R G	Serial No.	Parts catalogue code
1	52400-K56-N21	CUSHION ASSY., RR.(KYB) -----	1	-------- --------	2PH
	52400-K56-N01	----------	1	-------- --------	PH
2	90103-KPP-T00	BOLT, FLANGE, 10X46 ---------	1		
3	90182-K56-N00	BOLT, FLANGE, 10X41 ---------	1		
4	90304-KGH-901	NUT, U, 10MM ----------	1		