FUEL TANK

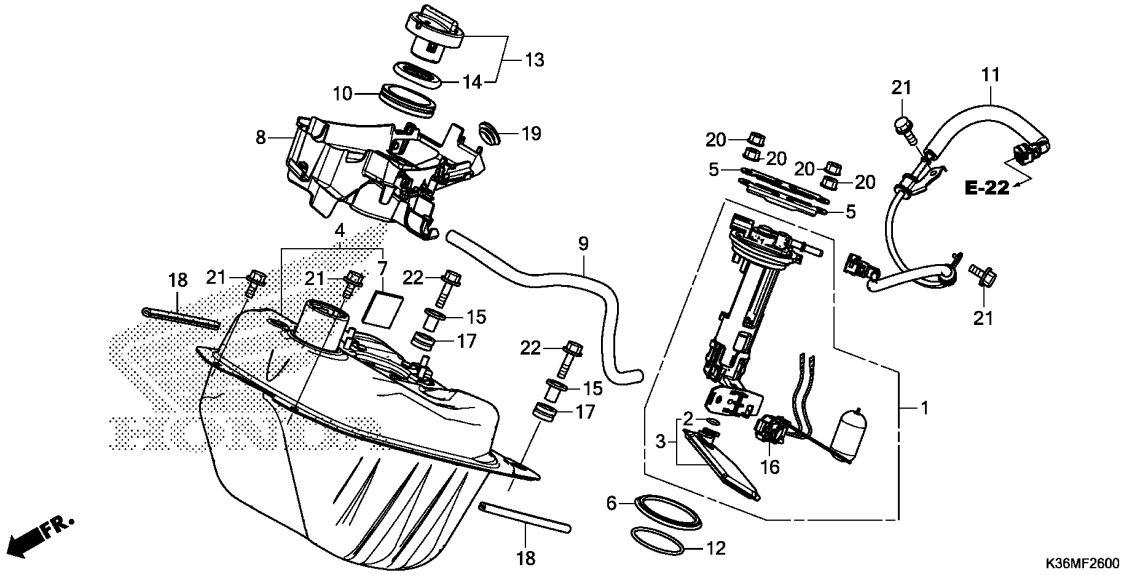

Ref. No.	L.O.N.	(Relative ref. Number) Description	F.R.T.
1		(6,12)	
	3101A0	PUMP, FUEL	3.1
3		(2)	
	3101C7	FILTER, FUEL	3.2
4	310100	TANK, FUEL	3.2
8	3101A7	TRAY, FUEL TANK	2.4
11	310162	HOSE, FUEL FEED	1.1
16	617105	FUEL TANK SENDING UNIT	3.2

Ref. No.	Part No.	Description	Reqd. QTY WW150 F	Serial No.	Parts catalogue code
1	16700-K35-V01	PUMP UNIT, FUEL	1		
2	16706-GGL-J01	O-RING, 6.8X1.9	1		
3	16707-K35-V01	FILTER SET	1		
4	17510-K36-T00	TANK COMP., FUEL	1		
5	17517-GGL-J00	RETAINER, FUEL PUMP	2		
6	17518-GGL-J00	DUST SEAL	1		
7	17519-K35-V00	FILM, TANK PROTECTOR	1		
8	17525-K35-V00	TRAY, FUEL	1		
9	17526-K35-V00	TUBE, FUEL TRAY DRAIN	1		
10	17527-K35-V00	RUBBER, FUEL SEAL	1		
11	17570-K36-J01	HOSE COMP., FUEL FEED	1		
12	17572-GGL-J00	O-RING, FUEL PUMP	1		
13	17620-K20-A11	CAP COMP., FUEL FILLER	1		
14	17632-K20-A11	PACKING, FUEL FILLER CAP	1		
15	18357-KA4-710	COLLAR, SILENCER	2		
16	37800-K35-V01	FUEL UNIT	1		
17	38119-MM8-000	GROMMET, HORN STAY	2		
18	64415-KPH-B30	RUBBER, BODY COVER SETTING	2		
19	83551-GE2-000	GROMMET, AIR CLEANER CASE	1		
20	94050-06000	NUT, FLANGE, 6MM	4		
21	95701-06012-00	BOLT, FLANGE, 6X12	4		
22	95701-06025-00	BOLT, FLANGE, 6X25	2		