REAR FENDER

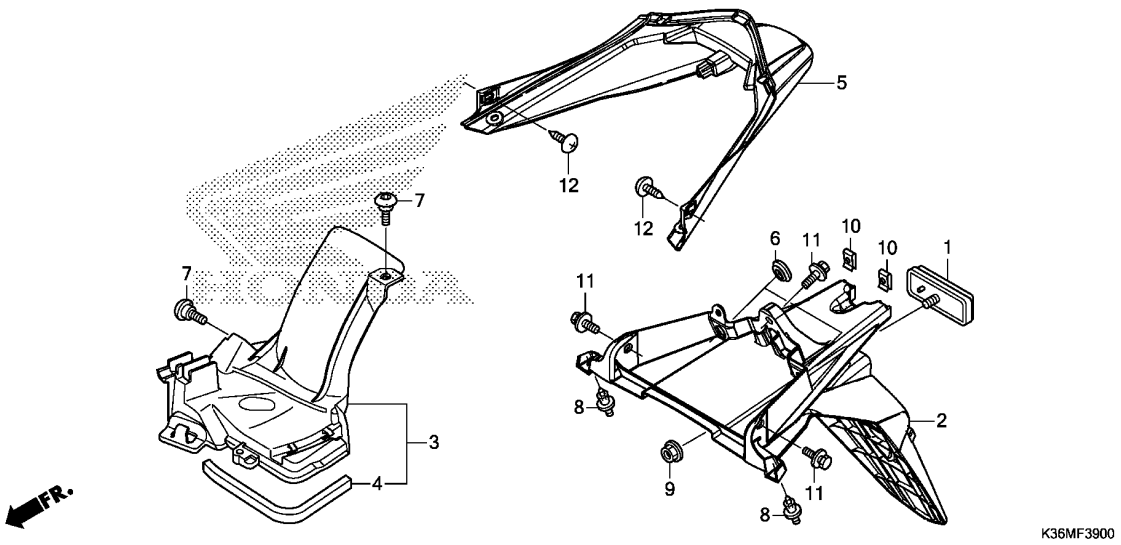

Ref. No.	L.O.N.	(Relative ref. Number) Description	F.R.T.
2	413102	FENDER, REAR	0.7
3	4131N4	FENDER, INNER :REAR	1.0
5	6161P5	COVER, LICENSE LIGHT	0.8

Ref. No.	Part No.	Description	Reqd. QTY WW150 F	Serial No.	Parts catalogue code
1	33741-KWN-901	REFLECTOR, REFLEX	1		
2	80105-K35-V00	FENDER, RR.	1		
3	80106-KZR-601	FENDER ASSY., RR. INNER	1		
4	80108-KZR-600	SEAL, RR. INNER FENDER	1		
5	80110-K35-V00ZA	COVER SET, LICENSE LIGHT(WL)			
		NH1.....BLACK	1		
6	83551-GE2-000	GROMMET, AIR CLEANER CASE	2		
7	90001-KWR-000	BOLT, SOCKET, 6X18	2		
8	90116-SP0-003	CLIP, BUMPER SEAL	2		
9	90301-KWN-901	NUT, U, 5MM	1		
10	90302-KWW-A00	NUT, SPRING, 4MM	2		
11	93404-06012-00	BOLT-WASHER, 6X12	3		
12	93903-35320	SCREW, TAPPING, 5X16	2		