E-13
CARBURETTOR

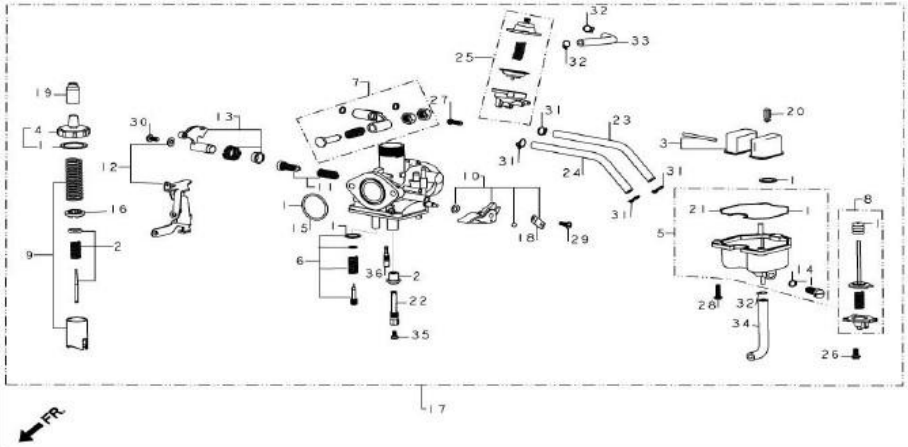

Service Item	F.R.T.
NEEDLE,SET JET	0.7
CARBURETTOR ASSY.	--
FLOAT, SET	0.6
VALVE COMP., FLOAT	--
JET	--
TOP SET	0.3
VALVE SET THROTTLE	--
CHAMBER SET FLOAT	0.4
PUMP, DIAPHRAGM SET	0.5

BOM Of Group Number: E-13 Model :: CBZ* (Mar, 2004)

Ref No.	Part Number	Description	Req.
1	16010-KFN-851	GASKET SET	1
2	16012-KFN-852	NEEDLE SET JET	1
3	16013-KEH-900	FLOAT, SET	1
4	16014-KCH-850	TOP SET	1
5	16015-KEH-900	CHAMBER SET FLOAT	1
6	16016-KFN-851	SCREW SET, 'A'	1
7	16018-KEH-900	ARM SET PUMP	1
8	16021-KC5-004	PUMP, DIAPHRAGM SET	1
9	16022-KFN-851	VALVE SET, THROTTLE	1
10	16025-KCN-751	LEVER SET, CHOKE	1
11	16028-KEH-900	SCREW SET, 'B'	1
12	16030-KFN-851	PLATE SET, STAY	1
13	16031-KEH-900	ARM SET, PUMP	1
14	16075-GHB-640	'O' RING, 1.3 X 4.3	1
15	16075-GHB-870	'O' RING, 2.4 X 29	1
16	16092-HM8-A01	PLATE, VALVE 'B'	1
17	16100-KFN-931	CARBURETTOR ASSY	1
18	16119-440-004	PLATE SET	1
19	16148-KB1-921	CAP, CABLE SEALING	1
20	16155-413-751	VALVE COMP. FLOAT	1