E - 5 Right crankcase cover

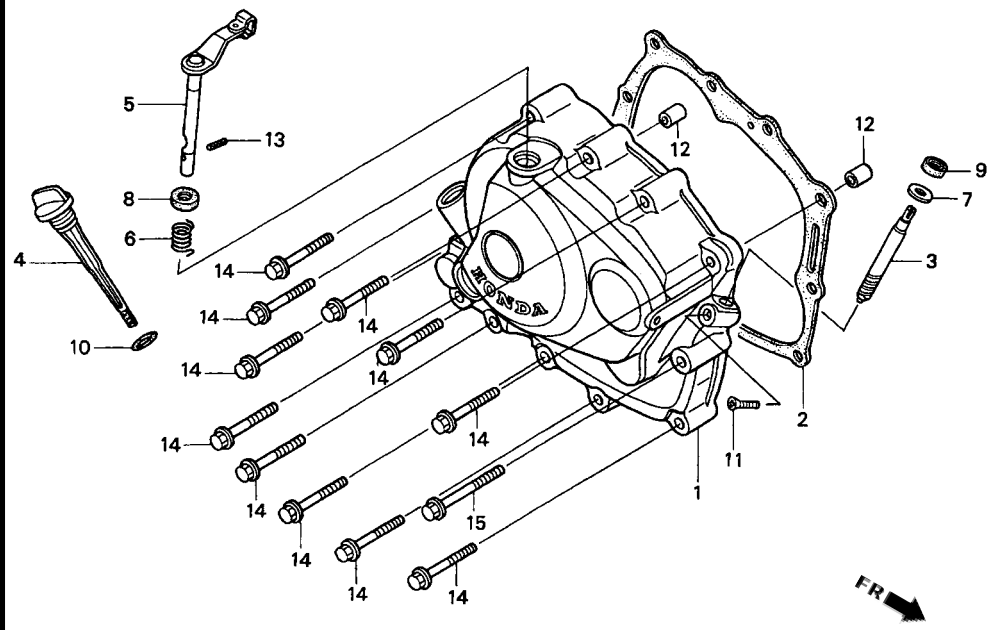

KEHG - GL156S

No.	Part Number	Description	Q'ty
1	11330-KEH-900	COVER COMP., R. CRANKCASE	1
2	11393-KCJ-710	GASKET, R. COVER	1
3	12431-KG2-000	GEAR, TACHOMETER	1
4	15650-KEH-900	GAUGE, OIL LEVEL	1
5	22810-437-000	LEVER COMP., CLUTCH	1
6	22815-428-000	SPRING, CLUTCH LEVER	1
7	90458-324-010	WASHER, THRUST, 6.7MM	1
8	91201-KEH-900	OIL SEAL, 12X22X5	1
9	91201-324-023	OIL SEAL, 6.5X14.5X7	1
10	91307-035-000	O-RING, 18X3	1
11	93700-05025-0A	SCREW, OVAL, 5X25	1
12	94301-08140	PIN, DOWEL, 8X14	2
13	94305-30102	PIN, SPRING, 3X10	1
14	96001-06040-00	BOLT, FLANGE, 6X40	11
15	96001-06050-00	BOLT, FLANGE, 6X50	1