F - 24

Swingarm / Chain Case

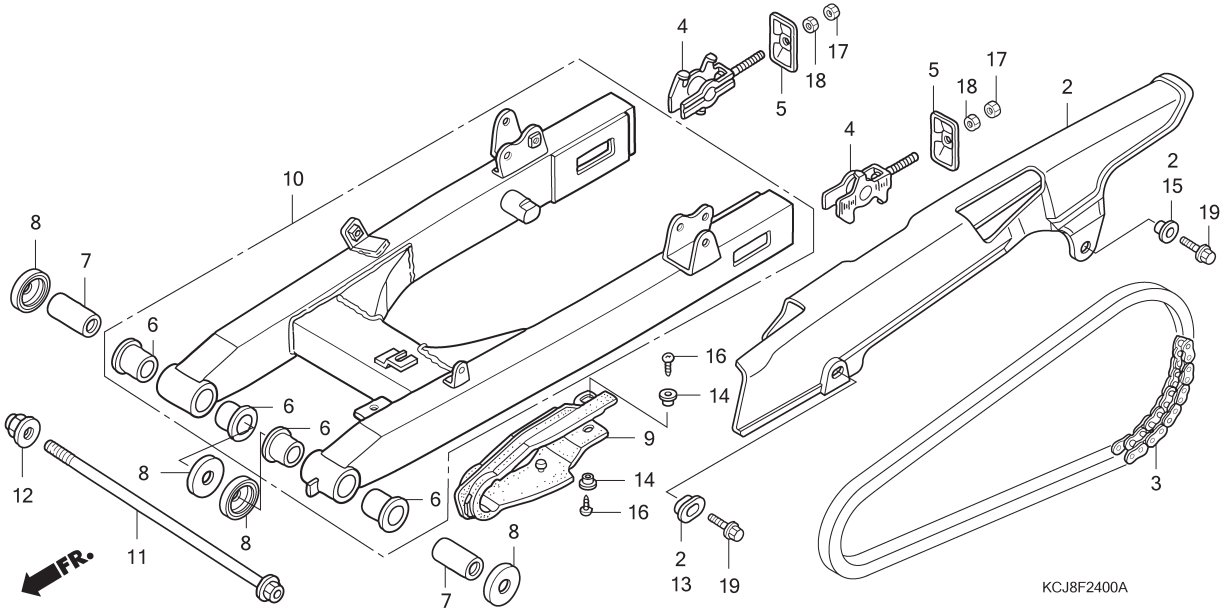

No.	Service item	F.R.T.
1	CHAIN KIT, DRIVE	0.8
2	CASE, DRIVE CHAIN	0.1
3	CHAIN, DRIVE(ENDLESS)	0.6
6	BUSH, SWINGARM PIVOT	1.0
7	COLLAR, SWINGARM PIVOT :LEFT	0.6
	COLLAR, SWINGARM PIVOT :RIGHT	0.6
	COLLAR, SWINGARM PIVOT :BOTH	0.6
9	SLIDER, CHAIN	0.3
10	SWINGARM ASSEMBLY	0.8

No.	Part Number	Description	QTY	Notes
2	40510-KCJ-660	CASE, DRIVE CHAIN	1	
3	40530-KS3-901	CHAIN, DRIVE (520V-C.5-106LE)	1	
4	40543-KCJ-690	ADJUSTER, CHAIN	2	
5	40546-KW8-900	CAP, RR. FORK END	2	
6	52108-356-006	BUSH, SWINGARM	4	
7	52141-KW1-900	COLLAR, RR. FORK PIVOT	2	
8	52144-GC4-003	DUST SEAL, 31X40.5X7.1	4	
	52144-GC4-005	DUST SEAL, 31X40.5X7.1	4	
9	52171-KCJ-691	SLIDER, CHAIN	1	
10	52200-KCJ-660	SWINGARM SET	1	TIGER REVO
	52200-KCJ-670	SWINGARM SET	(1)	NEW TIGER REVO
11	90121-KBW-900	BOLT, SWINGARM PIVOT	1	
12	90305-KCJ-951	NUT, U, 14MM	1	
13	90513-405-000	WASHER, 6X9	1	
14	90556-044-000	WASHER, FR. FENDER SETTING	2	
15	90563-KC5-000	WASHER, CHAIN CASE SETTING	1	
16	93901-25220	SCREW, TAPPING, 5X12	2	
17	94001-08000-0S	NUT, HEX., 8MM	2	
18	94030-08000	NUT, HEX., 8MM	2	
19	95701-06014-07	BOLT, FLANGE, 6X14	2	