G 8

F-2

Meter

Compteurs

Messer

Medidor

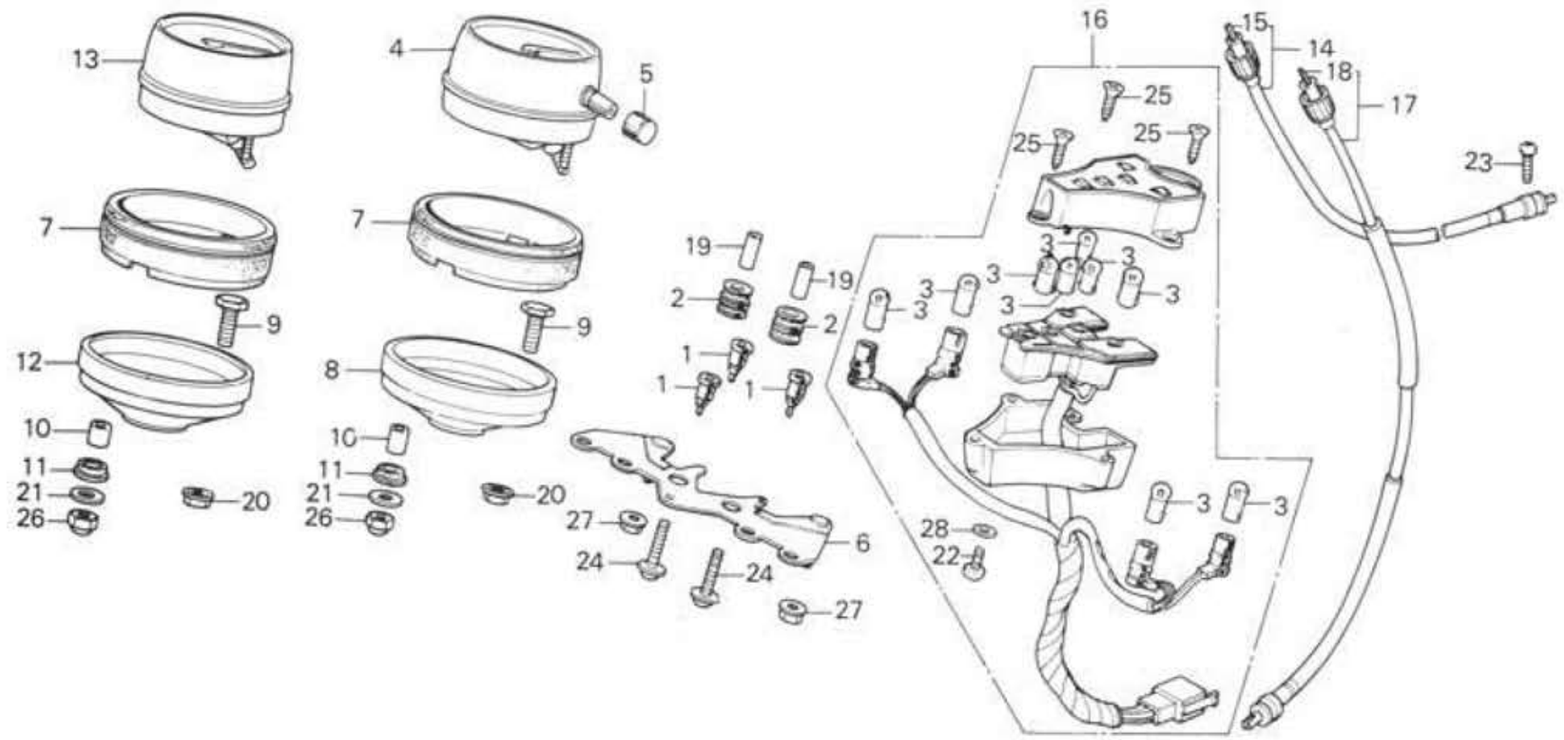

Service item	F.R.T.	Ref. No.	Part No.	Description	Reqd. No. CB650z	Serial No.	Area code
		10	37243-323-700	COLLAR, METER SET	4		
		11	37244-307-670	RUBBER, METER SETTING	4		
		12	37246-426-000	PLATE, TACHOMETER UNDER	1		
		13	37250-426-008	TACHOMETER ASSY. (NIPPON SEIKI)	1		DK,DM,U
			37250-426-009	TACHOMETER ASSY. (ND)	1		DK,DM,U
			37250-426-601	TACHOMETER ASSY. (NIPPON SEIKI)	1		1J,2J,E,ED,F
			37250-426-602	TACHOMETER ASSY. (ND)	1		1J,2J,E,ED,F
		14	37260-426-000	CABLE ASSY., TACHOMETER	1		
		15	37261-426-000	CABLE, TACHOMETER INNER	1		
		16	37600-426-671	PILOT ASSY., COMBINATION (NIPPON SEIKI)	1		
			37600-426-672	PILOT ASSY., COMBINATION (ND)	1		
		17	44830-426-000	CABLE ASSY., SPEEDOMETER	1		