Check the voltage between the regulator/recitifier battery charging line and ground line (page 14-7).

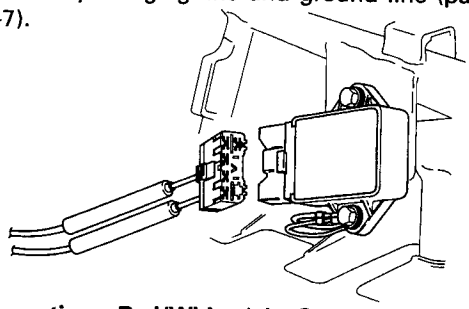

Connection : Red/White (+) – Green (–)
Standard : Battery voltage

Abnormal →
- Open circuit in wire harness
- Poorly connected connectors

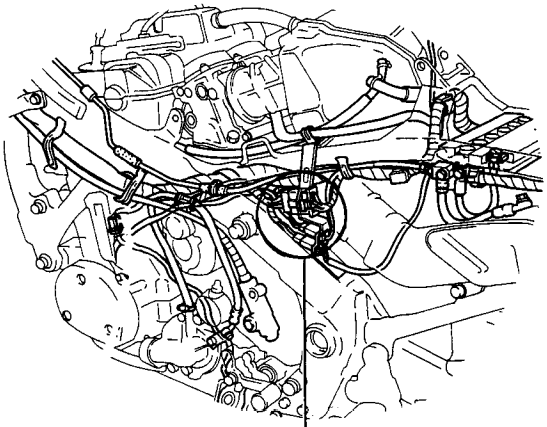

Normal ↓

Check the alternator (charging coil) resistance at the regulator/rectifier connector (page 14-7).

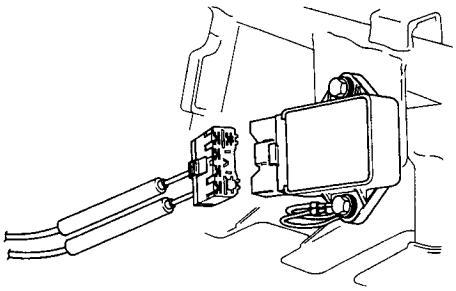

Connection : Yellow–Yellow
Standard : 0–1.0Ω

Abnormal →

Check the charging coil resistance at the alternator connector (page 14-8).

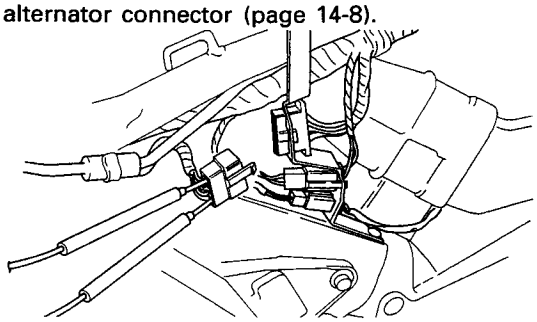

Connection : Yellow–Yellow
Standard : 0–1.0Ω

Abnormal →
- Faulty alternator

Normal →
- Poorly connected alternator connector
- Open or short circuit in Yellow wire

Normal ↓

Check the regulator/rectifier unit (page 14-8).

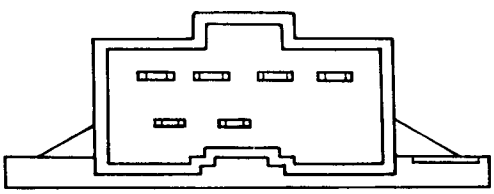

Abnormal →
- Faulty regulator/rectifier

Normal →
- Faulty battery